Bollard, Model R-1009-12-R

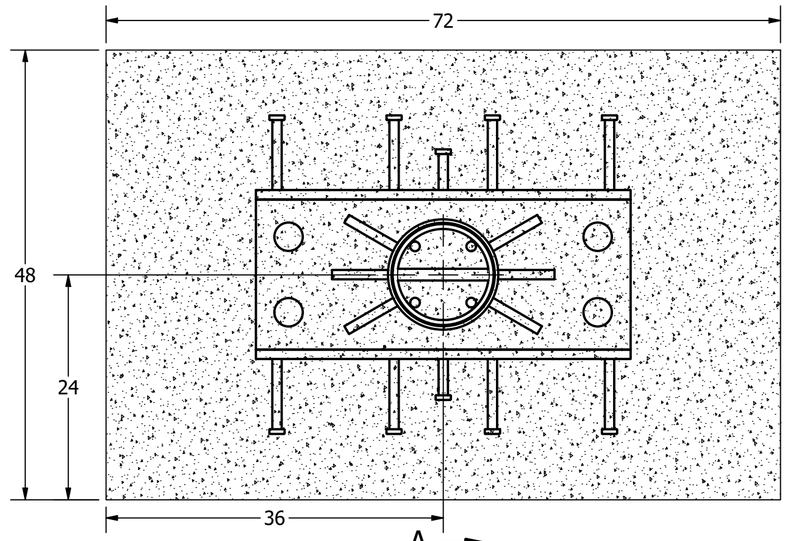

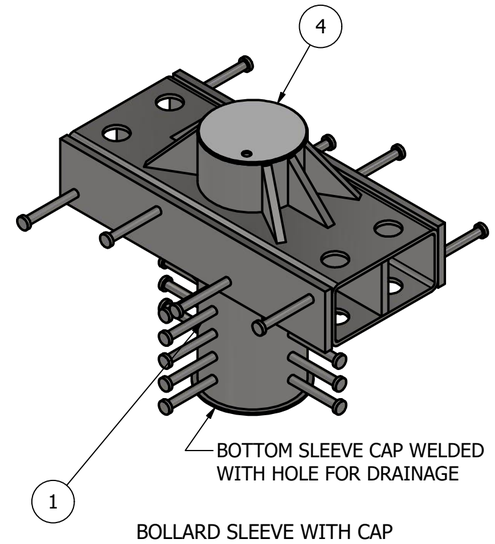

BOLLARD SLEEVE WITH CAP

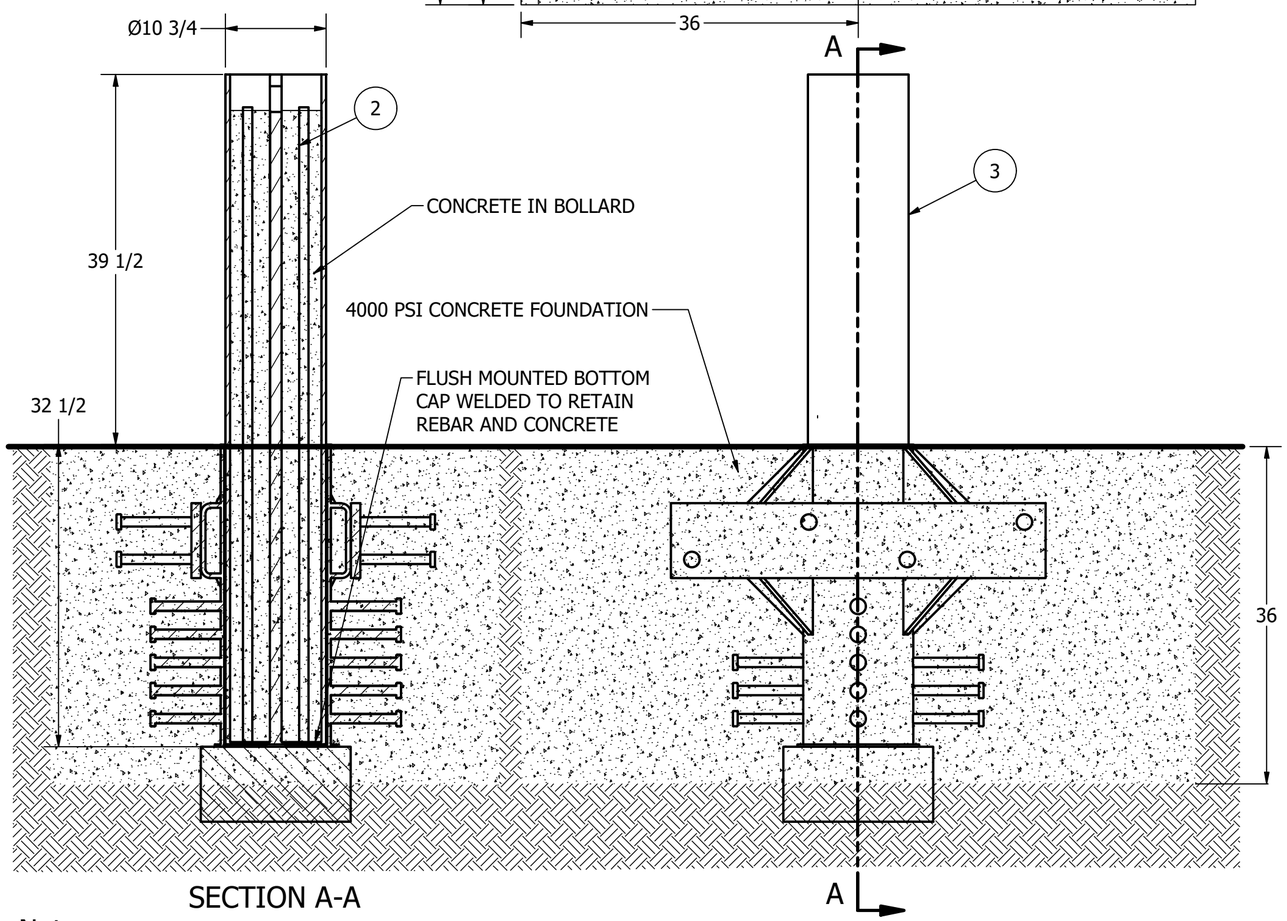

SECTION A-A

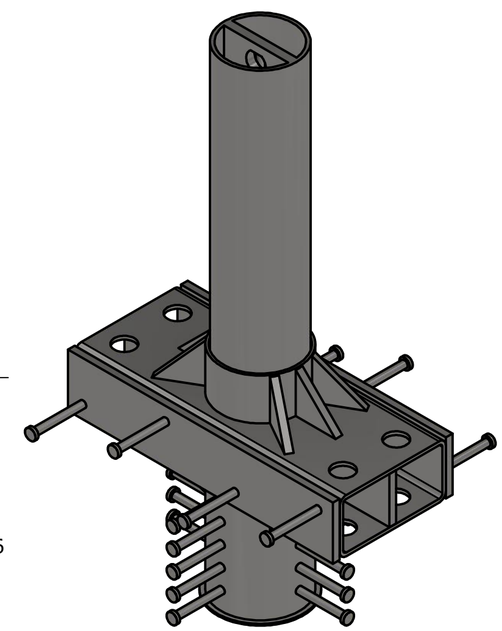

REMOVABLE BOLLARD INSTALLED
IN BOLLARD SLEEVE

General Description:

Reliance Foundry R-1009-12-R ASTM M50 removable crash-rated bollards make public spaces safer by protecting pedestrians and storefronts from vehicle intrusion. Two or more of these security bollards together are certified to ASTM M50 P1, engineered to stop a 15,000-pound vehicle travelling at 50 mph with 3.3 feet penetration. A single bollard will stop the same vehicle in 3.9 feet (P2 rated). Installation is very straightforward with no bolting, tying, or assembly needed. Prefabricated bollards can be placed directly into the excavation; no specialty subgrade required. The bollard can be removed easily by inserting a lifting handle through the top of the bollard and lifting the bollard out of the bollard sleeve using a forklift. Choose from a range of bollard covers to enhance aesthetics.

For more information on bollard post installation, please visit:
www.reliance-foundry.com/bollard/installation-bollards

Specifications:

Height: 72"

Body Size: 40" X 34"

Weight: 1257 lbs

Material: Steel

Notes:

- Embedment details are for reference illustration only. Minimum foundation sizes depend on local soil conditions, weather conditions, and engineering requirements.
- Bollard is provided as shown, with parts listed below. Concrete foundation and/or installation not provided by Reliance Foundry.
- This drawing is not drawn to scale. Dimensions provided herein is for reference only. Please consult Reliance Foundry sales professionals if any dimension is critical to your particular installation.
- Reliance Foundry reserves the right to amend design and specifications without prior notice for product improvement.

PARTS LIST

ITEM	QTY	PART NUMBER	DESCRIPTION
1	1	R-1009-12-R Removable Sleeve	R-1009-12-R Removable Sleeve
2	4	Rebar 68	Rebar 1in OD, 68in Length
3	1	R-1009-12-R Removable Bollard	R-1009-12-R Removable Bollard
4	1	R-1009-12-R Removable Cap	R-1009-12-R Removable Cap

RELIANCE FOUNDRY
SINCE 1925
Unit 207, 6450 - 148 Street, Surrey, BC V3S 7G7, Canada
1-877-789-3245 info@reliance-foundry.com
www.reliance-foundry.com

TITLE
Bollard R-1009-12-R

SIZE	DWG NO	REV
C	R-1009-12-R	A

NOT TO SCALE | SHEET 1 OF 1